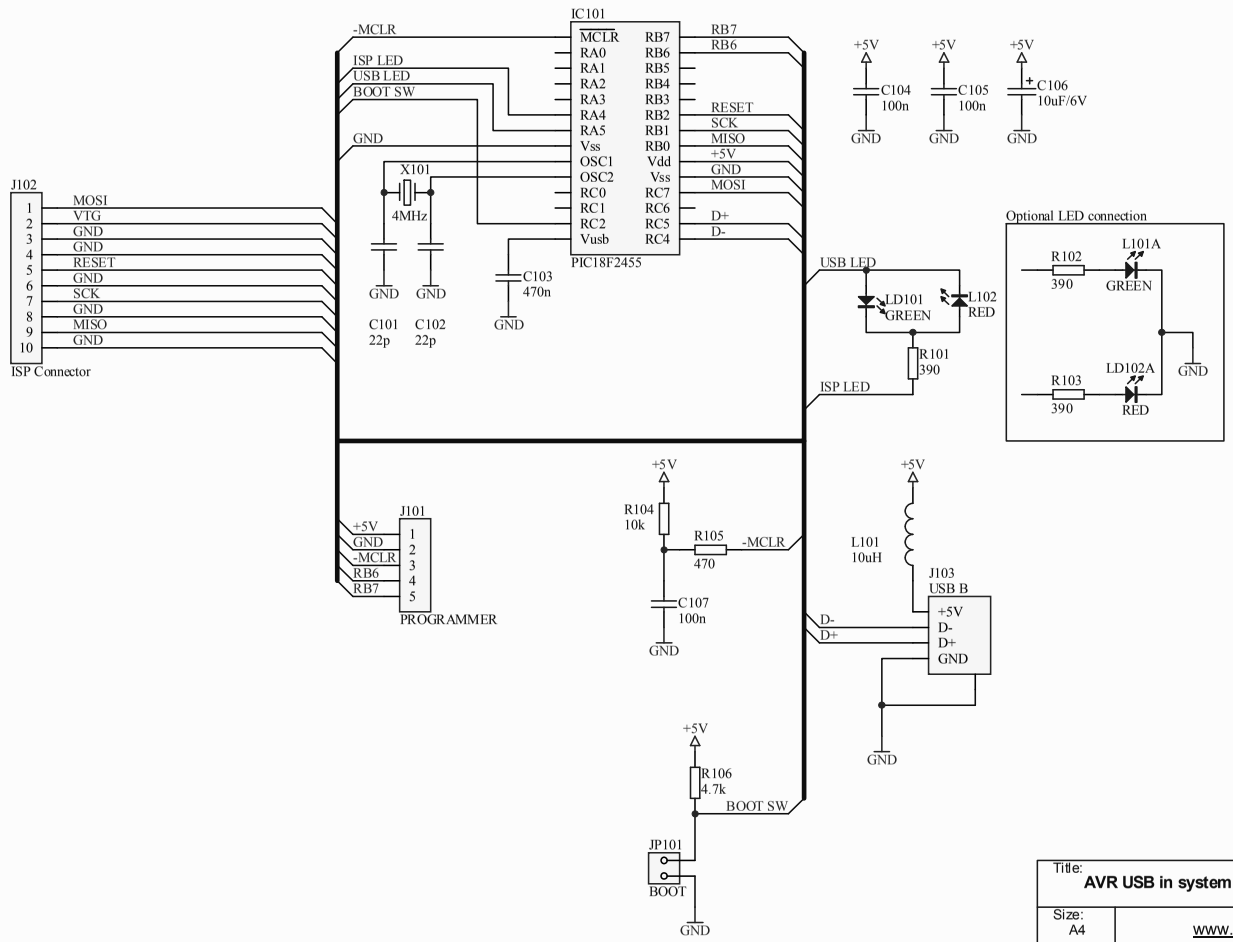

Gadget Paradise

Title: **AVR USB in system programmer** 11-03-01

Size: A4 | www.gadgetparadise.com | Revision: 1.0

Copyright (c) 2006-2007 GadgetParadise

Sheet 1 of 1

Drawn by: L. Arvai